September 23, 2015

Technical Guidance Coordinator
Department of Environmental Protection
Policy Office
Rachel Carson State Office Building
P.O. Box 2063
Harrisburg, PA 17105-2063
ecomment@pa.gov

RE: Draft Technical Guidance Manual for Vapor Intrusion

Dear Sir or Madam:

We appreciate the opportunity to comment upon the draft vapor intrusion (VI) guidance. My colleagues at AECOM and I have reviewed the draft document and our comments are attached.

I am well qualified to comment upon this topic. My first VI project was in 1988 at Hill AFB in Utah. Since that time, I have designed field measurement programs and/or performed data evaluation to address VI for over 200 sites in 36 States. In addition to project work, I was an author of the ITRC VI guidance document, was an author of the ASTM standards for VI screening, and was the primary author of the ASTM D7663 standard for soil gas sampling.

Please feel free to contact me with any questions or feedback. I can be reached at bart.eklund@aecom.com or at 512-419-5436.

Yours truly,

Bart Eklund
Vapor Intrusion Leader, Global Remediation Practice

AECOM Corporation
P.O. Box 201088
Austin, TX 78720-1088
9400 Amberglen Boulevard
Austin, TX 78729

AECOM Comments on PADEP VI Guidance

September 23, 2015

INTRODUCTION

We appreciate the opportunity to submit these comments to the Pennsylvania Department of Environmental Protection (DEP) regarding the document titled, "Land Recycling Program Technical Guidance Manual for Vapor Intrusion into Buildings from Groundwater and Soil under Act 2."

DEP issued this 103-page Manual as a draft dated July 25, 2015 to replace the previous 57-page Manual dated January 24, 2004. We believe the draft guidance is a substantial improvement over previous DEP guidance in this area and we applaud DEP for their efforts to date. We do think, however, that some additional improvements are both possible and advisable.

We offer the following comments on the development of final guidance. Major comments are listed below, followed by Table 1 which lists specific comments along with the corresponding section number and recommended action.

MAJOR COMMENTS

The scope of the draft guidance and the level of detail are appropriate. The writing is generally well-organized and clear. We are especially glad to see that the guidance stresses the need for a conceptual site model and that it treats petroleum hydrocarbon sites and chlorinated solvent sites separately and differently. We note that screening values for soil gas have been added, screening values for soil have been retained, and screening values for groundwater are about two orders of magnitude more conservative than in the 2004 document.

Our major comments are as follows:

1. The Option of Using a Combination of Standards is Potentially Confusing.

Under the proposed guidance, the VI pathway can be evaluated under the Statewide health standard, the site-specific standard, or a combination of both standards. Site owners/operators with sites across multiple States may not be familiar with the Pennsylvania program. The two flow charts are helpful, but additional text in Section C3 on page 10 would assist users with limited PA experience to understand their options for addressing VI.

2. The Expectations for VI Investigations at Large Buildings are Not Clear

Given the inherent variability from site to site, the guidance avoids being overly prescriptive with regard to the number of samples or the number of rounds of testing

needed to evaluate VI beyond stating (on page 29) that, "DEP recommends a minimum of two sample locations and two sampling rounds for screening." It would be helpful to provide separate recommendations for single-family houses and for larger industrial or commercial buildings.

ADDITIONAL COMMENTS

Line by line specific comments are given in Table 1.

Table 1. Specific Comments

Page	Section	Comment	Recommended Action
4	Section B – Definition and Use of Important Terms	The term "proximity distance" differs from the well-established terminology used in other VI guidance documents. The USEPA uses "separation distance" and this term is widely used and understood, though some other publications use "exclusion distance." Introducing a PA-specific term is unnecessary and potentially confusing to users.	Change "proximity distance" to "separation distance" throughout.
4	Section B	The vertical 6-ft. distance is more conservative than the 5-ft. distance in the ITRC guidance and is far more conservative than the 0-ft. distance cited by Lahvis, et al. (2013).	Change 6-ft. to 5 ft. throughout.
21	Section G.3	The requirement that indoor air data be collected when the daily average temperature is at least 15°F below the minimum indoor air temperature in the occupied areas should not be required for any buildings or areas that do not have heating systems (e.g., warehouse spaces).	Provide an exception for unheated buildings.
66	Appendix X	EPA's evaluation of attenuation factors based on paired sub-slab and indoor air data introduces a potential upward bias to the attenuation factors to the extent that indoor or ambient sources contributed to the measured indoor air values.	Any values greater than 0.01 are not realistic in terms of long-term VI rates and should not be used.

Page	Section	Comment	Recommended Action
87	Appendix Z	Temporal variability is addressed by using multiple rounds of samples. Temporal variability generally decreases as a function of depth in the soil column. Temporal variability is unlikely to be significant at depths of 5 ft. bgs or greater.	Change recommendation to multiple rounds of samples may be needed for indoor air and sub-slab soil gas, not deeper soil gas.
94	Appendix Z	The term "shut in" test actually refers to a "vacuum leak check" and the latter term has been used in air measurements for decades.	Change "shut in" to "vacuum leak check"
95	Appendix Z	A 10% leak rate criterion is proposed. Please see ASTM D7663-12, which indicates that leak rates up to 20% may be acceptable but any values in the 10 to 20% range should be flagged.	Change text to conform to ASTM D7663-12 (Attachment One).
95	Appendix Z	There is no technical justification for limiting sample flow rate to 200 mL/min. Grab samples are acceptable.	Delete flow rate limit. See Eklund 2011 (Attachment Two)
95	Appendix Z	There is no technical basis for recommending a 30-minute sampling period for soil gas sampling. Grab samples are acceptable.	Delete time limit. See Eklund 2011 (Attachment Two)
100	Appendix Z	The ΔP across a slab may vary with time of year. The recommended 1 Pa value is relatively low compared with USEPA and ASTM recommendations for radon systems (which are in the 6 to 10 Pa range).	Suggest using a criterion of 5 Pa if testing is done in summer and 1 Pa for wintertime or worst-case conditions.

List of Attachments

Attachment	Description or Reference
One	ASTM D7663-12
Two	Eklund, B. Evaluation of Soil-Gas Sampling Rate. In: Proceedings of Indoor Air 2011, the 12th International Conference on Indoor Air Quality and Climate. Sponsored by ISIAQ. Austin, TX. June 5-10, 2011.

Attachment One

Designation: D7663 – 12

Standard Practice for Active Soil Gas Sampling in the Vadose Zone for Vapor Intrusion Evaluations[1]

This standard is issued under the fixed designation D7663; the number immediately following the designation indicates the year of original adoption or, in the case of revision, the year of last revision. A number in parentheses indicates the year of last reapproval. A superscript epsilon (ε) indicates an editorial change since the last revision or reapproval.

1. Scope

1.1 *Purpose*—This practice covers standardized techniques for actively collecting soil gas samples from the vadose zone beneath or near dwellings and other buildings.

1.2 *Objectives*—Objectives guiding the development of this practice are: (1) to synthesize and put in writing good commercial and customary practice for active soil gas sampling, (2) to provide an industry standard for soil gas sampling performed in support of vapor intrusion evaluations that is practical and reasonable.

1.3 This practice allows a variety of techniques to be used for collecting soil gas samples because different techniques may offer certain advantages for specific applications. Three techniques are presented: sampling at discrete depths, sampling over a small screened interval, and sampling using permanent vapor monitoring wells.

1.4 Some of the recommendations require knowledge of pressure differential and tracer gas concentration measurements.

1.5 The values stated in SI units shall be regarded as standard. Other units are shown for information only.

1.6 This practice does not address requirements of any federal, state, or local regulations or guidance, or both, with respect to soil gas sampling. Users are cautioned that federal, state, and local guidance may impose specific requirements that differ from those of this practice.

1.7 *This standard does not purport to address all of the safety concerns, if any, associated with its use. It is the responsibility of the user of this standard to establish appropriate safety and health practices and determine the applicability of regulatory limitations prior to use.*

1.8 This practice offers a set of instructions for performing one or more specific operations. This document cannot replace education or experience and should be used in conjunction with professional judgment. Not all aspects of this practice may be applicable in all circumstances. This ASTM practice is not intended to represent or replace the standard of care by which the adequacy of a given professional service must be judged, nor should this document be applied without consideration of a project's many unique aspects. The word "Standard" in the title means only that the document has been approved through the ASTM consensus process.

2. Referenced Documents

2.1 *ASTM Standards:*[2]

D653 Terminology Relating to Soil, Rock, and Contained Fluids

D854 Test Methods for Specific Gravity of Soil Solids by Water Pycnometer

D1356 Terminology Relating to Sampling and Analysis of Atmospheres

D1946 Practice for Analysis of Reformed Gas by Gas Chromatography

D2216 Test Methods for Laboratory Determination of Water (Moisture) Content of Soil and Rock by Mass

D2487 Practice for Classification of Soils for Engineering Purposes (Unified Soil Classification System)

D3404 Guide for Measuring Matric Potential in Vadose Zone Using Tensiometers

D4696 Guide for Pore-Liquid Sampling from the Vadose Zone

D4700 Guide for Soil Sampling from the Vadose Zone

D5088 Practice for Decontamination of Field Equipment Used at Waste Sites

D5092 Practice for Design and Installation of Ground Water Monitoring Wells

D5314 Guide for Soil Gas Monitoring in the Vadose Zone

D5466 Test Method for Determination of Volatile Organic Chemicals in Atmospheres (Canister Sampling Methodology)

D5504 Test Method for Determination of Sulfur Compounds in Natural Gas and Gaseous Fuels by Gas Chromatography and Chemiluminescence

D6196 Practice for Selection of Sorbents, Sampling, and

[1] This practice is under the jurisdiction of ASTM Committee D18 on Soil and Rock and is the direct responsibility of Subcommittee D18.21 on Groundwater and Vadose Zone Investigations.

Current edition approved March 15, 2012. Published April 2012. Originally approved in 2011. Last previous edition approved in 2011 as D7663–11. DOI: 10.1520/D7663-12.

[2] For referenced ASTM standards, visit the ASTM website, www.astm.org, or contact ASTM Customer Service at service@astm.org. For *Annual Book of ASTM Standards* volume information, refer to the standard's Document Summary page on the ASTM website.

Copyright © ASTM International, 100 Barr Harbor Drive, PO Box C700, West Conshohocken, PA 19428-2959, United States.

Thermal Desorption Analysis Procedures for Volatile Organic Compounds in Air

D6725 Practice for Direct Push Installation of Prepacked Screen Monitoring Wells in Unconsolidated Aquifers

E741 Test Method for Determining Air Change in a Single Zone by Means of a Tracer Gas Dilution

E2024 Test Methods for Atmospheric Leaks Using a Thermal Conductivity Leak Detector

F1815 Test Methods for Saturated Hydraulic Conductivity, Water Retention, Porosity, and Bulk Density of Athletic Field Rootzones

3. Terminology

3.1 This section provides definitions and descriptions of terms used in or related to this practice. A list of acronyms and a list of symbols also are included. The terms are an integral part of this practice and are critical to an understanding of the practice and its use.

3.2 Definitions of Terms Specific to This Standard:

3.2.1 *active sampling*, *n*—a means of collecting a gas-phase substance that employs a mechanical device such as a pump or vacuum assisted critical orifice to draw air into or through a sampling device.

3.2.2 *adsorption*, *n*—a physical process in which molecules or gas, of dissolved substances, or of liquids adhere in an extremely thin layer to the surfaces of solid bodies with which they are in contact.

3.2.3 *ambient air*, *n*—any unconfined portion of the atmosphere; open air.

3.2.4 *attenuation factor* (α), *n*—ratio of indoor air concentration to soil-gas concentration for a given compound.

3.2.5 *background level*, *n*—the concentration of a substance that is typically found in ambient air (for example, due to industrial or automobile emissions), indoor air (for example, from building materials or indoor activities) or the natural geology of an area.

3.2.6 *blank sample*, *n*—a sample that is intended to contain none of the analytes of interest and which is subjected to the usual analytical or measurement process to establish a zero baseline or background value. Blank samples are named according to their type and use (for example, field blank, trip blank, equipment blank, reagent blank).

3.2.7 *contaminant*, *n*—substances not normally found in an environment at the observed concentration.

3.2.8 *dead volume*, *n*—the total air-filled internal volume of the sampling system.

3.2.9 *duplicate samples*, *n*—two samples taken from and representative of the same population and carried through all steps of the sampling and analytical procedures in an identical manner.

3.2.10 *effective porosity*, *n*—the amount of interconnected void space (within intergranular pores, fractures, openings, and the like) available for fluid movement: generally less than total porosity.

3.2.11 *equipment blank*, *n*—a sample of the gas which is used to purge the sampling equipment between uses. Sampling equipment blanks are used to check the cleanliness of sampling devices and the thoroughness of the cleaning procedure.

3.2.12 *field blank*, *n*—unused media carried to the sampling site, exposed to sampling conditions (for example, connected to the sampling lines) and returned to the laboratory and treated as an environmental sample. Field blanks are used to check for analytical artifacts or background contaminants or both introduced by sampling and analytical procedures.

3.2.13 *fracture*, *n*—a break in the mechanical continuity of a body of rock or soil caused by stress exceeding the strength of the rock or soil. Includes joints and faults.

3.2.14 *free product*, *n*—organic contaminants in the liquid ("free" or non-aqueous) phase.

3.2.15 *ground water*, *n*—the part of the subsurface water that is in the saturated zone.

3.2.16 *liquid phase*, *n*—contaminant residing as a liquid in vadose zone pore space, often referred to as "free product."

3.2.17 *moisture content*, *n*—the amount of water lost from a soil upon drying to a constant weight, expressed as the weight per unit weight of dry soil or as the volume of water per unit bulk volume of the soil.

3.2.18 *passive sampling*, *n*—a means of collecting an airborne substance that depends on gaseous diffusion, gravity, or other unassisted means to bring the sample to the collection surface of sorbent.

3.2.19 *partitioning*, *n*—the act or process of distributing a chemical among different phases or compartments.

3.2.20 *perched aquifer*, *n*—a lens of saturated soil above the main water table that forms on top of an isolated geologic layer of low permeability.

3.2.21 *permeability*, *n*—the ease with which a porous medium can transmit a fluid under a potential gradient.

3.2.22 *preferential pathway*, *n*—a migration route for chemicals of concern that has less constraint on gas transport than the surrounding soil. Preferential pathways may be natural (for example, vertically fractured bedrock where the fractures are interconnected) or man-made (for example, utility conduits, sewers, dry wells).

3.2.23 *porosity*, *n*—the volume fraction of a rock or unconsolidated sediment not occupied by solid material but usually occupied by liquids, vapor, or air, or combinations thereof. Porosity is the void volume of soil divided by the total volume of soil.

3.2.24 *purge volume*, *n*—the amount of air removed from the sampling system prior to the start of sample collection. This is usually referred to in number of dead volumes.

3.2.25 *reagent blank*, *n*—sample of one or more reagents used in a given analysis.

3.2.26 *saturated zone*, *n*—the zone in which all of the voids in the rock or soil are filled with water at a pressure that is greater than atmospheric. The *water table* is the top of the *saturated zone* in an unconfined aquifer.

3.2.27 *semi-volatile organic compound (SVOC)*, *n*—organic compounds with boiling points typically in the range 240-260 to 380-400 °C with polar compounds in the higher range.

3.2.28 *soil gas*, *n*—vadose zone atmosphere. Soil gas is the air existing in void spaces in the soil between the groundwater table and the ground surface.

3.2.29 *soil moisture*, *n*—the water contained in the pore spaces in the vadose zone.

3.2.30 *sorbent sampling*, *n*—the collection of an air sample via removal of chemicals from a gas by passing the gas through or allowing it to come in contact with a sorptive medium. The chemicals are subsequently desorbed for analysis.

3.2.31 *sub-slab vapor sampling*, *n*—the collection of vapor from the zone just beneath the lowest floor slab of a building.

3.2.32 *tracer*, *n*—a material that can be easily identified and determined even at very low concentrations and that may be added to other substances to enable their movements to be followed or their presence to be detected.

3.2.33 *tracer gas*, *n*—a gas used with a detection device to determine the rate of air interchange within a space, or between spaces.

3.2.34 *trip blank*, *n*—clean, unused sampling media that is carried to the sampling site and transported to the laboratory for analysis without having been exposed to sampling procedures.

3.2.35 *vadose zone*, *n*—hydrogeological region extending from the soil surface to the top of the principal water table. Perched ground water may exist within this zone.

3.2.36 *vapor intrusion*, *n*—the migration of a volatile chemical(s) from subsurface soil or water into an overlying or nearby building.

3.2.37 *volatile organic compound (VOC)*, *n*—organic compounds with boiling points typically ranging from a lower limit between 50 °C and 100 °C, and an upper limit between 240 °C and 260 °C, where the upper limits represent mostly polar compounds.

3.2.38 *water table*, *n*—the top of the saturated zone in an unconfined aquifer.

3.3 Acronyms and Abbreviations

3.3.1 *BLS*—Below Land Surface (also known as below ground surface [bgs])

3.3.2 *HDPE*—High density polyethylene tubing

3.3.3 *OD*—Outer Diameter

3.3.4 *PEEK*—Polyetheretherketone

3.3.5 *PTFE*—Polytetrafluoroethylene

3.3.6 *ppbv*—part-per-billion on a volume basis

3.3.7 *PRT*—post-run tubing

3.3.8 *QC*—Quality Control

3.3.9 *SVOC*—Semi-Volatile Organic Compound

3.3.10 *TO*—Toxic Organic

3.3.11 *USEPA*—United States Environmental Protection Agency

3.3.12 *VOC*—Volatile Organic Compound

3.4 Symbols

3.4.1 Variables (typical units)

3.4.1.1 C = concentration (ppbv, $\mu g/m^3$, %)

3.4.1.2 C_{DL}= detection limit concentration ($\mu g/m^3$)

3.4.1.3 d = diameter (cm)

3.4.1.4 L = length (cm)

3.4.1.5 M = mass (µg)

3.4.1.6 n = number of data points

3.4.1.7 Q = flow rate (cm^3/min)

3.4.1.8 t = time (min)

3.4.1.9 V = volume (cm^3)

3.4.1.10 X_{MW}= molecular weight of compound X (g/mol)

3.4.1.11 α = attenuation coefficient or factor (dimensionless)

3.4.1.12 ΔP = change in pressure (Pa)

3.4.1.13 τ = residence time (min)

3.5 Superscripts

3.5.1 — = mean value

3.6 Subscripts

3.6.1 *i* = pertaining to compound, time, or location *i*

4. Summary of Practice

4.1 This practice describes the active collection of soil gas samples from soil pore spaces in the vadose zone or in fill material directly under building slabs to determine the concentration of volatile organic compounds (VOCs). Three techniques are presented: (1) sampling at discrete depths, (2) sampling over a small screened interval, or (3) sampling using permanent vapor monitoring wells with one or more screened intervals. For sampling at a given depth, options include (i) a short stainless steel probe installed in a small diameter hole drilled through building slab, (ii) disposable drive tips and post-run tubing (PRT), or (iii) installation of sampling points using tubing placed into a borehole and sealed in place with clay or other packing material. Several different combinations of equipment and materials can be used to actively collect soil gas samples, and this practice is intended to allow all methods that typically result in representative and reproducible samples. Other techniques for assessing soil vapor concentrations exist (for example, passive sampling), but are outside the scope of this practice. The design of soil gas sampling programs (for example, the number and location of samples necessary to characterize a site) also is outside the scope of this practice. Table 1 summarizes the key design aspects for the most common techniques. Examples of various installation approaches are shown in Fig. 1.

4.2 *Choice of Technique*—In choosing a technique for collecting and measuring soil gas concentrations, the user should consider the study objectives, site geology, chemicals of interest, target concentrations, type of building and its construction, potential for preferential pathways to be present, potential for long-term or repeat sampling, the comparative capabilities of the techniques, and the complexity of the equipment and procedures.

5. Significance and Use

5.1 Soil-gas sampling results can be dependent on numerous factors both within and outside the control of the sampling personnel. Key variables are identified and briefly discussed below. Please see the documents listed in the Bibliography for more detailed information on the effect of various variables.

5.2 *Application*—The techniques described in this standard practice are suitable for collecting samples for subsequent analysis for VOCs by US EPA Method TO-15, US EPA Method TO-17, Test Method D5466, Practice D6196, or other VOC methods (for example, ISO 16017-1, US EPA Methods TO-3 and TO-12). In general, off-site analysis is employed when data are needed for input to a human health risk assessment and low- or sub-ppbv analytical sensitivity is required. On-site analysis typically has lesser analytical sensitivity and tends to be employed for screening level studies. The

TABLE 1 Comparison of Installation Options for Soil-Gas Sampling

Topic	Sub-Slab Probe	Direct-Push Options		Probe or Well with Annular Seal[A]
		Drive Point	Screened Interval	
Installation method	Hammer drill and 5 – 15 cm stainless-steel tube	Direct-push rig with sacrificial drive point	Direct-push rig with sacrificial drive point	Hollow-stem auger, direct push with coring
Typical minimum sampling depth BLS (m)	Bottom of slab	1.5	1.5	1.5
Typical length of sampling depth interval (cm)	None[B]	2.5–5	15 –30	Can be customized to any length. Typically at least 15 cm
Type of seal[C]	Clay, cement, wax, PTFE tape	Gasket at bottom of rods. Clay cap at ground surface	Clay layer directly above screened interval	Clay throughout the borehole annulus
Potential for dilution of sample by ambient air[D]	Low	Low	Very low	Very low
Typical purge volume	3 void volumes	3 void volumes	3 void volumes	3 void volumes
Potential for dilution of sample by soil gas from depths other than the sampling depth interval	Low	Moderate	Very low	Very low
Potential for smearing[E]	Very low	Low	Moderate	Low
Potential for plugging between uses	Very low	Moderate	Low	Low
Suitability for multiple uses	Seals may lose integrity over time	Not typically used more than once	Not typically used more than once	Suitable for multiple uses

[A]The type of wells described here have a screened interval that is isolated from the remainder of the monitoring well and connected to the ground surface via small-bore tubing. The use of traditional groundwater monitoring wells for soil-gas monitoring is possible if the screened interval extends up into the vadose zone, but such wells will have a relatively large dead space volume and therefore require purging of relatively large gas volumes.

[B]Sample is drawn from the preferentially permeable materials beneath the slab. The thickness of permeable materials varies and may not be known for a given site.

[C]The term “clay” here refers to use of applied material such as hydrated bentonite and not native in-situ material.

[D]All sampling options have an equal probability of ambient air dilution due to leaking fittings or tubing in the portion of the sampling train above the ground surface.

[E]Screened interval or pipe opening may become plugged during installation due to smearing of soil.

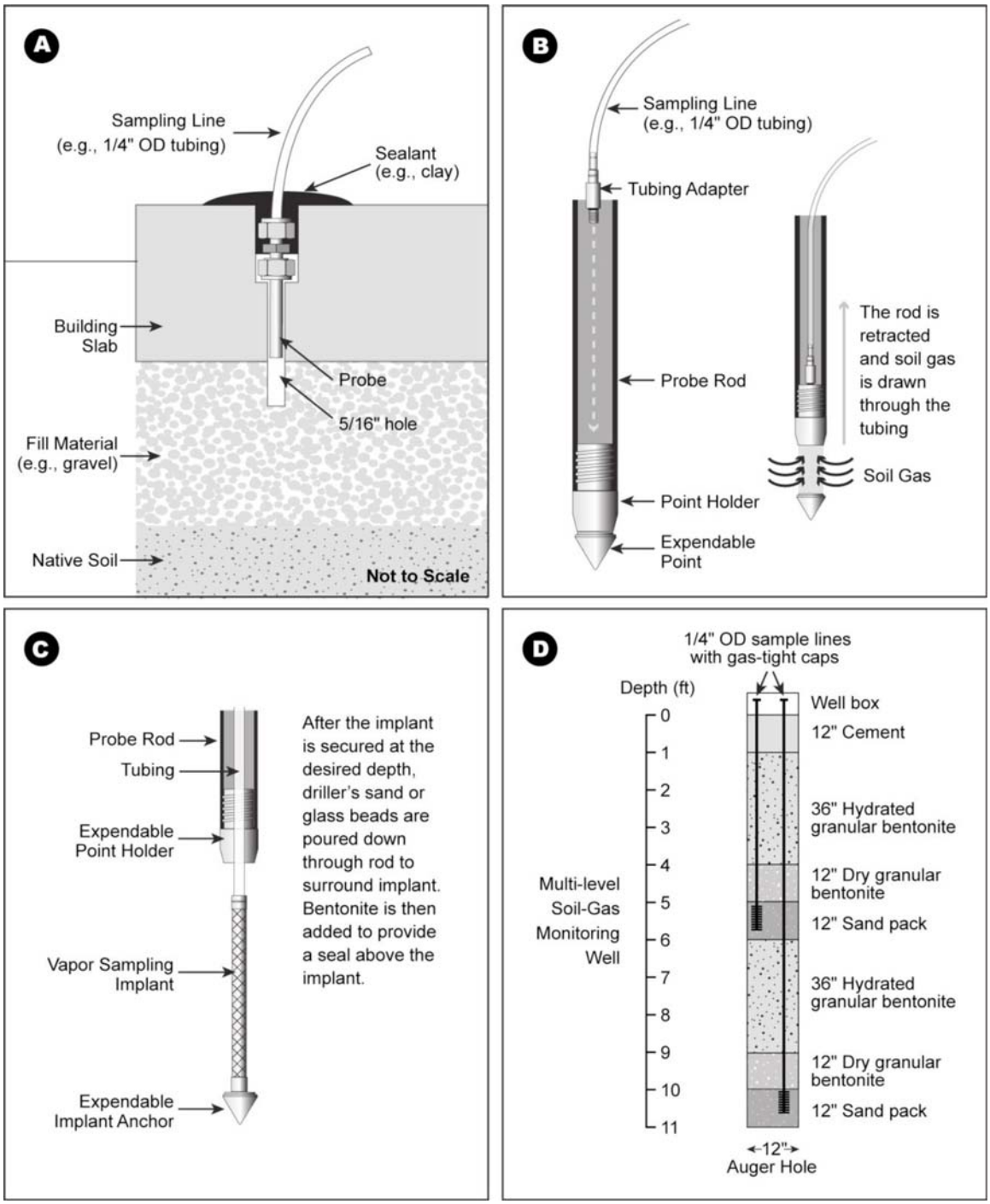

FIG. 1 Illustration of Various Installation Options: A—Sub-Slab Probe, B—Direct-Push Drive Point, C—Direct-Push Screened Interval, and D—Well with Annular Seal

techniques also may prove useful for analytical categories other than VOCs, such as methane, ammonia, mercury, or hydrogen sulfide (See Test Method D5504).

5.3 *Limitations*:

5.3.1 This method only addresses collection of gas-phase species. Less volatile compounds, such as SVOCs, may be present in the environment both in the gas phase and sorbed onto particulate matter, as well as in liquid phase. In soil gas, the gas-phase fraction is the primary concern. In other potential sampling locations (for example, ambient or indoor air), however, sampling for the particulate phase fraction may also be of interest.

5.3.2 The data produced using this method should be representative of the soil gas concentrations in the geological materials in the immediate vicinity of the sample probe or well at the time of sample collection (that is, they represent a

point-in-time and point-in-space measurement). The degree to which these data are representative of any larger areas or different times depends on numerous site-specific factors.

5.4 *Effect of Purging of Dead Space*—If a soil gas probe is to be sampled soon after installation, the gas within the probe and any sand pack will consist mostly of atmospheric air. This air must be purged before soil gas that is representative of the geologic materials can be obtained. If the probe has previously been sampled, it may be possible to collect a representative sample after a smaller volume of gas is purged, but the volume of gas in the probe tubing or pipe must be purged at a minimum. It is recommended that a minimum of three (3) dead volumes be purged from the sampling system immediately prior to sample collection. Larger purge volumes typically are not necessary to achieve stable readings and should be avoided for shallower probes or if the potential exists that the additional purging will affect the partitioning of the VOCs in the subsurface. Larger purge (and sample collection) volumes can result in migration of soil gas from locations some distance from the sampling probe. Preferential pathways within the soil may exist and so the uncertainty associated with the origin of the soil gas will tend to increase with increasing purge (and sample) volumes. The data, however, should still be representative of how VOCs will migrate in these subsurface conditions.

5.5 *Effect of Sampling Rate*—The faster the rate of sampling, the larger the pressure differential (that is, vacuum) that is induced at the point(s) where soil gas enters the sampling system. The relationship between the flow rate and the vacuum is primarily dependent on the gas-permeability of the subsurface materials. This pressure differential has the potential to affect the partitioning of the VOCs in the subsurface if the VOCs exist in two or more phases (for example, free phase, dissolved phase, gas phase, sorbed onto soil particles) at or near the sampling depth (for example, within 1 m of the sample probe[3]). Sampling at relatively high rates (for example, >200 mL/min) has the potential to introduce a positive bias to the results (that is, make the results more conservative). The magnitude of any such bias is believed to be at most a factor of two. If the sampling depth is not near the source of the vapors, faster sampling rates (or larger sampling volumes) are not expected to have a significant effect on data quality.

5.6 *Effect of Induced Vacuum*—If desired, the induced vacuum can be limited by some upper bound value (for example, 2500 Pa [10 in. of water column]). The induced vacuum, however, is dependent on variables such as soil moisture as well as length and internal diameter of sampling line that may not be under the control of the user. Most significantly, the use of an upper limit for induced vacuum may preclude the use of preset flow control devices that allow unattended sample collection into evacuated canisters.

5.7 *Effect of System Volume and Length of Tubing*—The system volume should be relatively small to minimize the volume of dead space that must be removed prior to sampling. In practice, this typically means that 0.32 or 0.64-cm (⅛ or ¼-in.) OD tubing is used for shallow probes. For deeper probes (for example, ≥10 m), larger diameter installations may be preferable to minimize potential for plugging over time. Larger diameter probes and tubing also may be needed for large volume sub-slab sampling. The length of any tubing used in the above-ground sample collection train also should be kept to a minimum. If the ambient air temperature is less than the bulk soil temperature, condensation may form in the above-ground sampling lines and remove polar compounds from the sample stream. The potential is greater if excess tubing is present, so the length of tubing extending from the probe or well to connect to the sampling device should be kept to a meter or less. When the ambient temperature is less than the soil gas temperature, collecting samples at or near the maximum obtainable flow rate for a given location will minimize the potential for condensation.

5.8 *Effect of Connections and Fittings*—The number of connections and fittings also should be kept to a minimum, as these represent potential points for leaks to occur. If possible, all connections should be made above ground and visually inspected. For direct push approaches, this requires that slotted drive caps and pull caps be used, to allow the tubing connection to the PRT adapter or implant to be made above ground prior to probe installation. All fittings shall be leak checked prior to use (See 7.3.1).

5.9 *Effect of Annular Seal*—Soil gas probes installed in an augered or cored hole with a thick slurry of bentonite and water in the borehole annulus above the sand pack have the least risk of atmospheric air leakage down the borehole annulus or cross-communication of soil gas between different intervals during purging and sampling. This relative advantage compared with other techniques is most apparent for geologic materials with relatively low gas permeability.

5.10 *Effect of Porosity*—The effective porosity of a soil may be different than the total porosity. Large spaces ("macro pores") such as fractures in fine-grained soils can impart a high permeability to materials that would otherwise have a low permeability. The emplacement of sampling probes in soil can cause compression or closure of macropores, resulting in a lower yield of soil gas than would otherwise occur through the uncompressed soil or formation.

5.11 *Effect of Environmental Variables*—In some cases, the soil gas concentrations may be affected by rainfall or changes in barometric pressure. The magnitude of any such effects is not well known, but is believed to be minimal at sampling depths ≥1.5 m. It is recommended that, at a minimum, hourly precipitation and barometric pressure data be obtained and reviewed for the 3-day period prior to sample collection as part of the data evaluation for any sampling of sub-slab probes or sampling depths <1.5 m.

Because diffusion of vapors from subsurface sources to the sampling probe relies on interconnected and air-filled pores within the soil column, soil moisture can have a significant

[3] Hartman, B., B.A. Schumacher, J. Zimmerman, D.S. Springer, R.J. Elliott, and M.C. Rigby. Results from EPA Funded Research Programs on the Importance of Purge Volume, Sample Volume, Sample Flow Rate and Temporal Variations on Soil Gas Concentrations, *Proceedings of Vapor Intrusion: Learning from the Challenges*, Sponsored by the Air & Waste Management Association (AWMA). Providence, RI. September 26-28, 2007

effect on the flux of contaminants and, therefore, the concentration of the contaminant available at the sampling location. As a result, areas of high soil moisture may have significantly lower soil gas results than areas of low soil moisture, even though subsurface concentrations are similar in both areas. Therefore, some knowledge of the soil moisture conditions can help in interpreting soil gas results. This knowledge is also useful for comparing results from multiple rounds of sampling performed at a site.

5.12 *Application of Results*—The data generated using this method should be suitable for use in characterizing the nature and extent of gases and volatile chemicals in soil gas for developing a conceptual site model, as input to vapor intrusion pathway models, to estimate indoor air concentrations using attenuation factors, or for plume mapping. Data should be reviewed in conjunction with any drilling records, soil moisture data, groundwater and soil pollutant concentrations, and other relevant lines of evidence.

NOTE 1—The quality of the result produced by this standard is dependent on the competence of the personnel performing it, and the suitability of the equipment and facilities used. Agencies that meet the criteria of Practice D7663 are generally considered capable of competent and objective testing/sampling/inspection/etc. Users of this standard are cautioned that compliance with Practice D7663 does not in itself assure reliable results. Reliable results depend on many factors; Practice D7663 provides a means of evaluating some of those factors.

6. Materials and Manufacture

6.1 The procedures given in this practice are applicable to a wide range of commercially available equipment and apparatus that are marketed for use in soil gas sampling or can be adapted for such use. General recommendations related to materials and manufacture are given below.

6.2 All surfaces in contact with the soil gas sample should be clean, dry, and inert. All materials of construction should be stainless-steel, glass, PEEK, or PTFE. Other materials may be substituted, but performance testing should be performed via equipment blank samples and adsorption studies to verify that the material does not introduce a positive or negative bias to measured concentrations.

6.3 No metal parts contaminated with cutting oils should be used if they will come in contact with the soil gas sample.

6.4 Flexible or low-density tubing should not be used in line with canister or sorbent sampling devices. In particular, problems with polyethylene tubing have been reported. Short sections (that is, ≤10 cm) of Tygon or other tubing may be used to temporarily connect portable field analyzers to the sampling system (but the pressure drop caused by the sampling system may affect the accuracy of the field analyzer).

6.5 Only compression fittings demonstrated to be leak-free at vacuums up to 101 000 Pa (1 atm) should be used. Vacuum leak checks (see 7.3.1) are recommended for all fittings, regardless of brand. Never use PTFE tape with compression fittings.

6.6 The use of granulated bentonite is preferred over powder or large chips to seal off probes at the ground surface or to provide an in-ground seal above the sampling depth. Hydration of the bentonite is necessary for it to be effective.

6.7 The use of sculpting clay is recommended to seal sub-slab probes to the floor slab. Alternatively, quick-setting swelling ("hydrating") concrete, wax, PTFE tape, or other VOC-free materials also can be used to achieve a good seal. Note that the seal may need to be re-done if torque is applied to the probe after the initial seal is installed.

7. Procedure

7.1 *Probe Installation*—Guidance for installing monitoring wells using hollow-stem auger and direct-push approaches, as well as for installing sub-slab vapor probes, may be found in the standards and documents listed in Referenced Documents and the Bibliography. After installation of the well or probe, the user should wait a minimum of 30 min after installation before starting sampling activities to allow adequate time for hydration of bentonite seals or curing of any cement seals, if such seals are used. For larger installations involving more sealant (for example, hollow stem auger wells), a longer minimum interval (for example, two hours or more) may be appropriate. The well or probe should be capped or plugged in an airtight manner whenever it is not in active use.

7.2 *Assemble Sampling Apparatus*—The sampling apparatus should be selected, designed, and operated in accordance with the guidelines given in Sections 5 and 6. Assemble the sampling apparatus in accordance with the manufacturer's instructions and appropriate regulatory guidance. Some examples of sampling systems are shown in Figs. 2-4.

7.3 *Pre-Sampling QC Checks*—Two procedures are given for checking for leaks within the sampling assembly for any depth of soil-gas sampling: one involving inducing a vacuum in the sampling system and a separate, additional leak check procedure involving a tracer gas. The vacuum check shall be performed prior to the collection of every sample. The tracer gas check should be performed for at least a subset of the sampling locations for sub-slab soil gas sampling and any soil-gas sampling at depths of ≤1 m below the ground surface.

7.3.1 *Sampling Train Leak Check*:

7.3.1.1 Assemble the sampling apparatus above ground to the extent feasible. For example, assemble an evacuated canister and flow controller or sorbent tube and pump, together with a particle filter and sampling line in the same manner as will be used during the actual sample collection.

7.3.1.2 While keeping the canister or sorbent tube and any sampling pump and valves in the "off" or "closed" position, apply vacuum to the sampling line. For example, a hand pump with built-in vacuum gauge can be attached to the end of the sampling line.

7.3.1.3 Withdraw air from the sampling apparatus until a vacuum of approximately 50 000 Pa (15 in. Hg) is achieved. Observe the induced vacuum for at least 1 min and preferably for 5 min.

7.3.1.4 If a change in vacuum over the observation period is equal to or less than 1700 Pa (0.5 in. Hg), the system leak rate is acceptable.

7.3.1.5 If the change in vacuum over the observation period is greater than 1700 Pa (0.5 in. Hg), check, tighten or replace the fittings and connections and repeat the leak check.

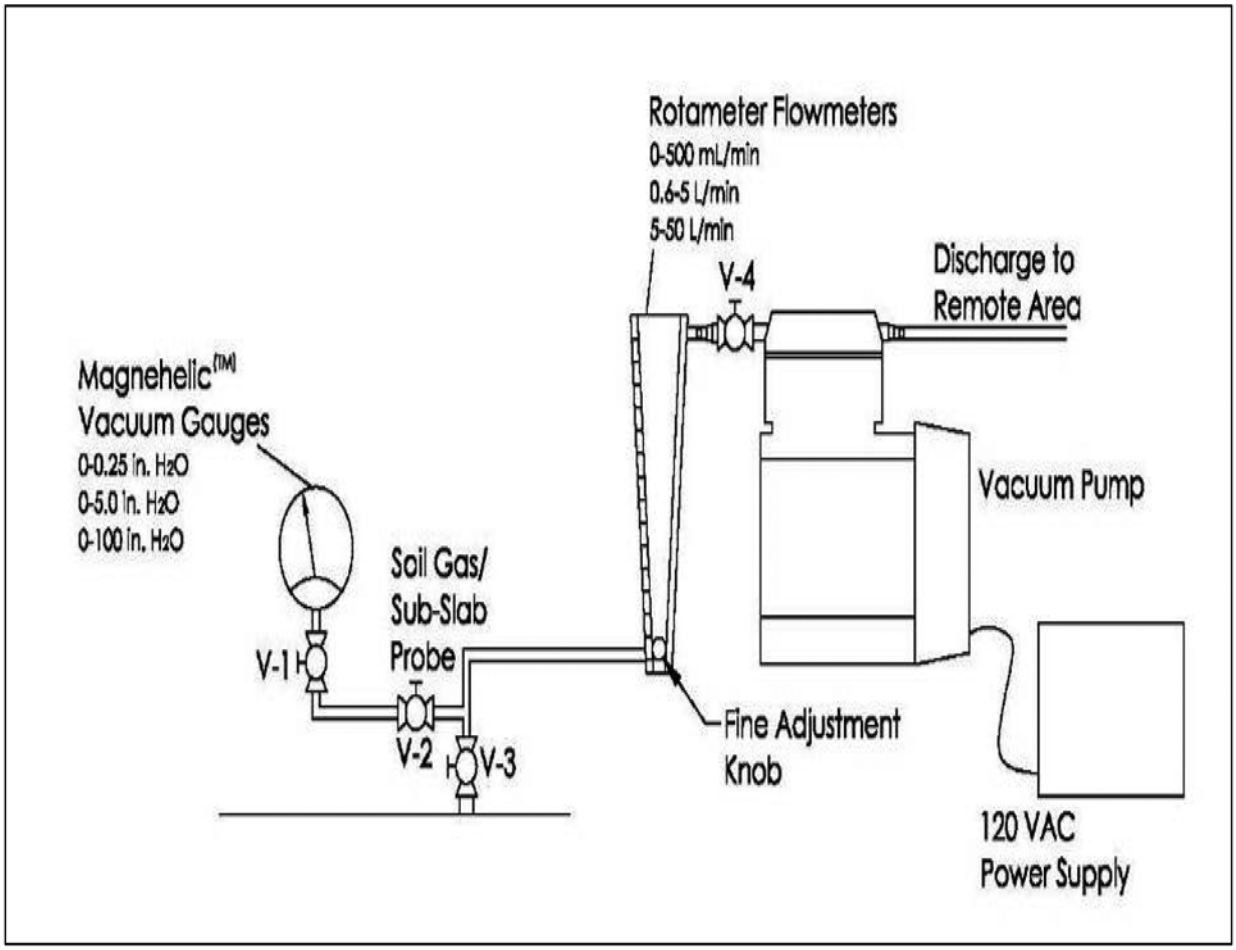

NOTE—Figure shown for example purposes only; other configurations are acceptable and may be used.

FIG. 2 Example Apparatus for Flow and Vacuum Monitoring

7.3.2 *Tracer Test* —A gas-phase tracer gas should be introduced near the probe installation to test the integrity of the probe seal.

7.3.2.1 Place an enclosure over the sub-slab probe. The shroud should encase all connections and fittings (including any canister sampler and flow regulator). The enclosure should have at least two small openings: one for introduction of tracer gas and one open to the atmosphere for pressure relief and access of a tracer gas monitoring device.

7.3.2.2 Introduce helium or another tracer gas into the enclosure until the internal concentration has stabilized as shown by portable analyzer readings. For helium, an atmosphere within the enclosure of 50 % or more should be achievable. At this point, the concentration within the shroud should be at least two orders of magnitude greater than the detection limit of the instrument used to monitor the tracer gas concentration.

7.3.2.3 If liquid tracers are used in lieu of a tracer gas, take care to avoid having the liquid tracer come into contact with tubing or other potentially permeable portions of the sampling train.

7.3.2.4 Collect a soil gas sample from the sub-slab probe. On-site analysis using a portable field analyzer is recommended.

7.3.2.5 If the concentration of the tracer gas in the sample is ≤10 % of the concentration of the tracer gas in the enclosure, the probe integrity is acceptable. Readings up to 20 % may be acceptable to meet the objectives of a given sampling program, but the results should be flagged to indicate that the concentrations may be biased low due to leakage.

7.3.2.6 False positives are possible (for example, helium analyzers may respond to methane). Check for false positives by measuring the soil gas concentration using the same analyzer used for the tracer checks, but without the shroud and tracer gas present.

7.4 *Sample Collection*—A field data sheet is shown in Fig. 5.

7.4.1 *Well or Probe Development*—For new installations, the air-filled volume of the sand pack or other void volume introduced around the sampling point or interval should be estimated and three times this volume be purged. The air-filled porosity of the sand pack can be assumed to be roughly 50 %.

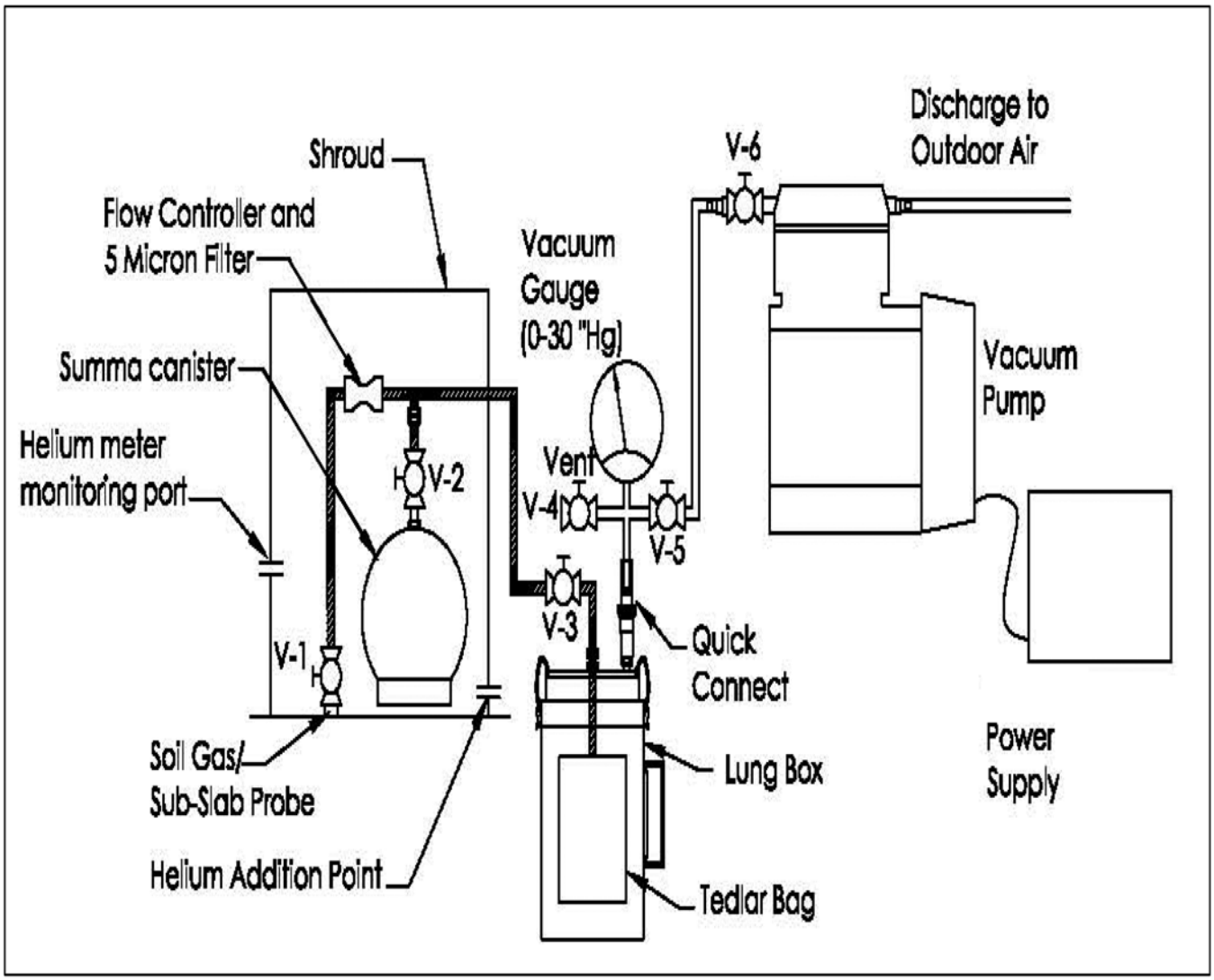

NOTE—Figure shown for example purposes only; other configurations are acceptable and may be used.

FIG. 3 Example Apparatus for Soil Gas Purging and Sampling with Tracer Gas

7.4.2 *Probe Purging*:

7.4.2.1 The void volume of the sampling assembly should be calculated. Typical tubing dimensions for ¼-in. OD tubing are:

Tubing Type	Outer Diameter	Inner Diameter	Wall Thickness	Volume per Foot
Thin-wall	¼ in.	3⁄16 in.	0.030 in.	5.43 mL
Thick-wall	¼ in.	⅛ in.	0.063 in.	2.41 mL

7.4.2.2 Three void volumes should be removed from the sampling assembly. As an alternative to using three purge volumes, purging should be performed until the purged gas exhibits stable concentrations as shown by portable analyzer readings (for example, flame ionization detector [FID] or photo-ionization detector [PID]).

7.4.2.3 If the sampling line becomes full of liquid water during purging, the sampling should be discontinued.

7.4.3 Concentration measurements may be performed during purging using portable field analyzers to demonstrate that the purging is adequate and steady-state concentrations have been achieved. Data from portable analyzers can be useful for screening total hydrocarbon or non-methane hydrocarbon levels or for determining aerobic versus anaerobic conditions using methane, carbon dioxide, or oxygen data, or combinations thereof. The sample can be collected in a bag or other container and then the analyzer connected to the container. Alternatively, the analyzer can be connected directly to the sampling line, but this may affect the readings due to the pressure drop in the sampling line.

7.4.4 Once any field measurement data has been collected, collection of samples for subsequent analysis can be started.

7.4.4.1 If canisters are used, canister vacuums must be measured in the field for each canister before and after use, per USEPA Method TO-15. The use of a single, dedicated vacuum gauge with range of 0 to 30 in. Hg vacuum to perform the pre- and post-sampling vacuum checks for all the canisters in a set is recommended.

NOTE—Photos shown for example purposes only; other configurations are acceptable and may be used.

FIG. 4 Examples of Soil Gas Sampling Using Evacuated Canisters

7.4.4.2 If the initial vacuum in any canister differs from the value reported by the laboratory by 3 in. Hg or more (after adjustment for any elevation effects), this canister should not be used.

7.4.4.3 If sorbent tubes are used, any pumps or metering devices should be downstream of the sorbent material so that the sample gas passes through the sorbent prior to encountering the pump or metering device.

7.4.4.4 If sorbents are used, there should be two tubes in series for each sampling point to address potential breakthrough.

7.4.4.5 Any metering devices must be calibrated under the same conditions (positive pressure or vacuum) for which they will be used during the field sampling.

7.4.5 The sampling rate can be set at any desired level, with the caveat that relatively high sampling rates at locations near the source of the vapors have the potential to introduce a modest positive bias to the measured concentrations. As noted in 5.5, the user may wish to limit the induced vacuum to some upper bound value (e.g., 2,500 Pa), to minimize any positive bias.

7.4.6 For sampling times of one hour or more, check and record the sampling rate (or change in canister vacuum) using an in-line gauge during the sample collection period and again at the end of sampling. This is especially important when sampling from low-permeability materials, because the rate of soil gas flow into the probe may be less than the expected sampling rate.

7.5 *Differential Pressure Measurement*—The differential pressure (that is, ΔP) between the subsurface sampling location and the atmosphere in the vicinity of the sampling location is useful for data evaluation. It should be measured as follows.

7.5.1 Attach a device capable of reading to ± 1 Pa (± 0.005 in. of water) to the end of the sampling line. Digital micromanometers or analog gauges have been used for this purpose.

7.5.2 Observe the ΔP value until a stable reading is obtained.

7.5.3 Record the reading using the following nomenclature: A positive sign indicates that any air movement is from the surface into the subsoil, whereas a negative sign indicates that air movement is from the subsurface to the surface.

7.5.4 Time-integrated or repeat readings should be considered because pressure fluctuations of several Pascals are possible over time frames of a few minutes.

7.6 *Quality Control Samples*—There are three types of field quality control (QC) checks that are sometimes used in soil gas sampling programs: duplicates, blanks, and background (ambient) samples. Each is discussed briefly below.

7.6.1 *Duplicates*—These provide a measure of variability and it is recommended that the rate of duplicate samples be ≥ 10 % of the regular samples.

7.6.1.1 The common practice of collecting simultaneous duplicates using a "T" in the sampling line is an acceptable option. Such duplicates primarily address analytical variability.

7.6.1.2 Other alternatives include collecting sequential samples at a given location or collecting collocated samples—

Site Name:		**Date:**	
Location ID:		**Sampling media ID:**	
Depth BLS:		**Flow controller/pump ID:**	

Date / Time	Activity	Results / Comments
	Complete probe/well installation	
	Purge system	Sampling line length =
	Leak check	
	Field screening	Oxygen (O_2) =
	Start sample	
	Interim vacuum / flowrate checks	
	End sample	
	Pressure differential	ΔP =

Weather:

Location Description:

NOTE—Users may use the units of their choice, but should note on the form the units used for depth, length of line, pressure differential, etc.

FIG. 5 Soil Gas Sampling Data Sheet

that is, sampling at two separate probes or wells screened over the same interval about 2 m apart at a given sampling location, assuming this spacing is small relative to the spacing among the regular sampling locations.

7.6.2 *Blanks*—These are a measure of background contamination in the sampling system.

7.6.2.1 Sorbent sampling methods should include at least the number of field and trip blank samples called for in the method being followed.

7.6.2.2 Collection of trip blanks in the field for canister sampling generally is not necessary.

7.6.2.3 Collection of equipment blanks is recommended in conjunction with the installation of any new probes or wells at a rate of at least one equipment blank per every 10 new probes or wells. This can be done either by drawing an air sample through the equipment assembly or from a sealed equipment assembly.

7.6.3 *Ambient Air*—Collection of ambient air samples for comparison with soil-gas results may be useful for programs involving sub-slab soil gas sampling and any soil-gas sampling at depths of ≤1 m below ground surface, especially if soil gas has relatively low concentrations of the compounds of interest and these same compounds are present as background in ambient air. If any ambient air samples are collected, a reasonable sampling rate is one ambient air sample per set of five adjacent houses where soil-gas sampling is performed and at least one ambient air sample should be collected each day that soil-gas sampling is performed.

7.7 *De-Con and Re-Use of Equipment* —Some components of the sampling system can be re-used. If equipment is reused, it is recommended that at least one equipment blank be collected to evaluate the potential for cross-contamination. The equipment blank should be collected towards the end of a sampling day after several regular samples have been collected. Users are referred to Practice D5088.

7.7.1 In general, when re-using equipment at a field site it is best to go from areas of lower contamination to areas of higher contamination, if these can be predicted.

7.7.2 There should be no visible soil or other contamination present on the equipment before its reuse.

7.7.3 Tubing at any above ground connections should be replaced before each sampling event. Alternatively, tubing may be flushed with ambient air between uses at a given location. It is recommended that tubing used at any one given location not be used at other locations to minimize the potential for cross-contamination.

7.7.4 Ferrules from compression fittings should never be re-used.

7.8 *Analytical Options*—The analysis of soil-gas samples may be performed using portable field instruments or by laboratory instruments or both. The laboratory may be located at the field site or be off-site. Commonly used laboratory approaches for soil-gas samples of VOCs include US EPA Method TO-15, US EPA Method TO-3, US EPA Method TO-17 and US EPA 8260.

8. Calculations

8.1 Calculate the internal dead space of sampling lines using the information provided in 7.4.2.1, if applicable. The internal dead space of tubing and other sampling components with circular cross sections can be obtained from vendor literature or calculated using the internal diameter (d) of the component and the length (L) of the component as follows:

$$V = \pi\left(\frac{d}{2}\right)^2 \times L \tag{1}$$

8.2 Alternatively, the internal space of a sampling component or sampling assembly can be determined empirically by filling the void space with water and then carefully decanting the water into a graduated cylinder.

8.3 If the total porosity is not known, the pore volume of the sand pack surrounding the screen of a soil gas probe can be calculated using Eq 1 and the relevant diameter and length of the screened interval. The result should be divided by a factor of two to conservatively account for the volume occupied by the sand particles.

8.4 The time (τ) to change out one residence [purge] volume in an enclosure is calculated as follows:

$$\tau = \frac{V}{Q} \tag{2}$$

8.5 *Sampling Duration and Flow Rate*:

8.5.1 *Sorbent Based Methods*—The minimum sampling duration is based on the desired detection limit (C_{DL}), the laboratory's analytical detection limit in terms of mass (M), and the manufacturer's or method's recommended flow rate for the type of sorbent cartridge or container that is used (Q). The calculation for the minimum time is as follows (note: 1 mL = 1 cm^3):

$$t = \frac{\dfrac{M}{(Q\ x\ 1E{-}06\ m^3/cm^3)}}{C_{DL}} \tag{3}$$

For example, if the desired detection limit is 500 µg/m^3, the analytical detection limit is 10 µg, and the expected sampling rate is 100 mL/min, the minimum sampling duration is:

$$\frac{\dfrac{10\ \mu g}{(100\ cm^3/min \times 1E{-}06\ m^3/cm^3)}}{500\ \mu g/m^3} = 200\ min \tag{4}$$

8.5.2 *Canister Based Methods*—The sampling duration is based on the canister volume and the recommended sampling rate in 7.4.5. Canisters should not be filled completely during sampling; the canister should be filled to, at most, about 90 % of its capacity.

$$t = \frac{(V \times 0.90)}{Q} \tag{5}$$

For example, the time to fill a 6L canister to 90 % of its volume at a flowrate of 45 cm^3/min is:

$$t = \frac{(6000\ cm^3 \times 0.90)}{45\ cm^3/min} = 120\ min$$

8.6 *Soil Gas Concentration*—For sorbent based methods, the concentration is calculated from the mass detected by the analytical laboratory and the volume of air pulled through the sorbent:

$$C = \frac{M}{(Q\ t)} \tag{6}$$

8.7 *Calculation of Statistics for Sub-Slab Soil Gas Data*—The average sub-slab concentration $\bar{X}$ should be calculated from the individual sub-slab measurements X_i for a given building or portion of a building of interest. A weighted average can be calculated if the area represented by each sampling location can be estimated with a reasonable degree of confidence. If the building footprint exceeds 250 m^2 or the number of sub-slab sampling locations, n, is >3, the use of an average sub-slab concentrations may provide a more realistic result than using the maximum concentration for calculating α values (Eklund and Burrows, 2009).[4]

8.8 *Unit Conversions*:

8.8.1 *Conversions Between ppbv and μg/m*^{3}—For any ideal gas with molecular weight X_{MW}, the conversions at 25 °C are as follows:

$$C\,(ppbv) = C\,(\mu g/m^3) \times (24.45 / X_{MW}) \quad (7)$$

$$C\,(\mu g/m^3) = C\,(ppbv) \times \left(\frac{X_{MW}}{24.45}\right) \quad (8)$$

The same equations can be used for conversions between mg/m^3 to ppmv with the appropriate substitutions. For temperatures other than 25 °C, the value of 24.45 should be adjusted.[5]

8.8.2 *Conversion between % (on a Volume Basis) and ppmv*—For any gas, 1 % = 10 000 ppmv. So, the conversions are as follows:

$$C\,(\%) = C\,(ppmv) \times 0.0001 \quad (9)$$

$$C\,(ppmv) = C\,(\%) \times 10\ 000 \quad (10)$$

8.8.3 Conversion between various units of pressure. One atmosphere (atm) of pressure equals the following:

= 101 300 Pascals (Pa)
= 1013 millibars (mbar)
= 29.9 inches of mercury (“Hg)
= 1033 centimeters of water (cm H_2O)
= 407 inches of water (in. H_2O) (in. w.c.)
= 14.7 psi
= 760 mm Hg (Torr)

9. Report

9.1 The test report shall contain the following information:

9.1.1 A statement to indicate the confidentiality of the information supplied, if appropriate,

9.1.2 A complete identification of the soil gas sample, including the date of sampling, the starting and ending times of the sample collection, the place of sampling, the depth interval below ground surface where soil gas was collected, and a unique sample identification code,

9.1.3 A reference to this test method,

9.1.4 The make and type of sampler used,

9.1.5 The make and type of sampling pump used,

9.1.6 The make and type of flowmeter used, the primary standard against which the calibration of the flowmeter was checked, and the atmospheric temperature and pressure at which the calibration of the flowmeter was checked,

9.1.7 The mean purge flow rate, in litres per minute,

9.1.8 The total volume of purge air, in both litres and number of system purge volumes,

9.1.9 The volume of air sampled, in litres, at atmospheric conditions,

9.1.10 The name of the person who collected the sample,

9.1.11 The results of vacuum leak checks,

9.1.12 The results of tracer gas leak checks (if performed),

9.1.13 The concentration of target analytes found in the soil gas sample in parts-per-billion and μg/m,[3]

9.1.14 The type of instrument used for sample preparation and analysis,

9.1.15 The estimated detection limit or analytical reporting limit,

9.1.16 The name of the analyst,

9.1.17 The date of the analysis, and

9.1.18 Any inadvertent deviations, unusual occurrences, or other notable observations.

10. Keywords

10.1 sample measurement; soil gas; vadose zone; vapor intrusion; volatile organic compounds

---

[4] Eklund, B. and D. Burrows. Prediction of Indoor Air Quality from Soil Gas Data at Industrial Buildings *GWM&R*, Vol 29, No. 1, pp 118-125. Winter 2009.

[5] The conversion is based on the ideal gas law (see below) and standard temperature (0 °C = 273 °K) and standard pressure (1 atm = 760 mm Hg). The ideal gas law is: PV = nRT, where:

P = pressure (atm)
V = volume of gas (L)
n = moles of the gas (number of moles = mass/MW)
R = gas constant (0.082056 L-atm/mole-°K)
T = temperature (°K)

For one mole of gas (n=1): (1 atm)(V) = (1)(0.0820)(273) and V= 22.4 L. In other words, one mole of any ideal gas occupies 22.4 L at standard temperature and pressure. At room temperature (25 °C = 298 °K), the ideal gas law yields: (1 atm)(V) = (1)(0.0820)(298) and V = 24.45 L

For benzene, for example, one mole of gas (78.11 g) occupies 24.45 L, which is equal to 0.02445 m.^{3} For pure gas, the concentration is 1 000 000 ppm. So: 1 000 000 ppm = 78.11 g/0.02445 m^3 and 1 000 000 ppm = 3190 g/m^3

Divide each side by one million (which converts g to μg): 1 ppm = 3190 μg/m.^{3} Divide each side by 1000 to convert to part per billion: 1 ppb = 3.19 μg/m.^{3}

BIBLIOGRAPHY

USEPA Documents:

(**1**) DiGiulio, D., C. Paul, et al. Assessment of Vapor Intrusion in Homes Near the Raymark Superfund Site Using Basement and Sub-Slab Air Samples, U.S. EPA Office of Research and Development, NRMRL. EPA/600/R-05/147. March 2006.

(**2**) US EPA Environmental Response Team. SOP #2042. June 1, 1996.

(**3**) USEPA. Compendium Method TO-15, Determination of VOCs in Air Collected in Specially-Prepared Canisters and Analyzed by GC/MS. USEPA Office of Research and Development. EPA Report No. 625/R-96/010b. 1999.

(**4**) USEPA. Compendium Method TO-17, Determination of VOCs in Ambient Air Using Active Sampling Onto Sorbent Tubes. USEPA Office of Research and Development. EPA Report No. 625/R-96/010b. 1999.

(**5**) USEPA Office of Emergency and Remedial Response, User's Guide for Evaluating Subsurface Vapor Intrusion into Buildings, February 22, 2004.

(**6**) USEPA. Comparison of Geoprobe PRT and AMS GVP Soil-Gas Sampling Systems with Dedicated Vapor Probes in Sandy Soils at the Raymark Superfund Site. EPA/ORD/NRMRL. EPA/600/R-06/111. November 2006.

(**7**) USEPA Region III Fact Sheet, Quality Control Tools: Blanks. November 15, 2001.

Other Documents:

(**8**) Abreu, L. D. and Johnson, P.C., "Effect of Vapor Source—Building Separation and Building Construction on Soil Vapor Intrusion as Studied with a Three-Dimensional Numerical Model," *Environmental Science and Technology*, 39, 4550-4561, 2005.

(**9**) Black C.A. 1965. "Methods of Soil Analysis: Part I Physical and mineralogical properties." American Society of Agronomy, Madison, Wisconsin, USA.

(**10**) California DTSC/CRWQCB. Advisory—Active Soil Gas Investigations. Memo from E.F. Lowry and D.A. Dickerson. January 28, 2003.

(**11**) Eklund, B. and V. Kremesec. *Recommended Practices Manual for Decision Making in Vapor Intrusion Evaluation*. Atlantic Richfield Company, A BP-Affiliated Company. September 4, 2006.

(**12**) Eklund, B. *What You Can Learn From an Airhead: Application of Air Quality Principles to Vapor Intrusion Studies,* Proceedings of the 100th Annual Meeting of the Air and Waste Management Association, Pittsburgh, PA, June 26-29, 2007.

(**13**) EPRI. *Reference Handbook for Site-Specific Assessment of Subsurface Vapor Intrusion to Indoor Air*. Report 1008492, EPRI, Palo Alto, CA. 2005.

(**14**) Geoprobe Systems. Direct Push Installation of Devices for Active Soil Gas Sampling & Monitoring. Technical Bulletin No. MK3098. Geoprobe Systems,® Salina, KS. May 2006.

(**15**) Hartman, B., B.A. Schumacher, J. Zimmerman, D.S. Springer, R.J. Elliott, and M.C. Rigby. *Results from EPA Funded Research Programs on the Importance of Purge Volume, Sample Volume, Sample Flow Rate and Temporal Variations on Soil Gas Concentrations,* Proceedings of Vapor Intrusion: Learning from the Challenges, Sponsored by the Air & Waste Management Association (AWMA). Providence, RI. September 26-28, 2007.

(**16**) Hayes, H., D.J. Benton, and N. Khan. *Impact of Sampling Media on Soil Gas Measurements,* Proceedings of Vapor Intrusion: The Next Great Environmental Challenge—An Update, Sponsored by the Air & Waste Management Association (AWMA). Los Angeles, CA. September 13-15, 2006.

(**17**) Hayes, H., D. Benton, S. Grewal, and N. Khan. *Evaluation of Sorbent Methodology for Petroleum Impacted Site Investigations,* Proceedings of Vapor Intrusion: Learning from the challenges, Sponsored by the Air & Waste Management Association, Providence, RI,. September 26-28, 2007.

(**18**) International Organization for Standardization (ISO). Soil Quality—Sampling—Part 7: Guidance on Sampling of Soil Gas. ISO/CD 10381-7. 2005.

(**19**) Lowell, P. and B. Eklund. VOC Emission Fluxes as a Function of Lateral Distance from the Source. *Environmental Progress*, Vol. 23, No. 1, pp 52-58. April 2004.

(**20**) McAlary, T., P. Nicholoson, H. Groenevelt, and D. Bertrand. A Case Study of Soil- Gas Sampling in Silt and Clay-Rich (Low-Permeability) Soils. *GWM&R*, Vol. 29, No. 1, pp 144-152. Winter 2009.

(**21**) McAlary, T., P. Nicholoson, L. Yik, D. Bertrand, and G. Thrupp. High Purge Volume Sampling—A New Paradigm for Subslab Soil Gas Monitoring. *GWM&R*on-line. Feb 22, 2010.

(**22**) McHugh, T.E., P.C. DeBlanc, and R.J. Pokuda. Indoor Air as a Source of VOC Contamination in Shallow Soils Below Buildings. *Soil & Sediment Contamination*, Vol. 15, pp 103-122. 2006.

(**23**) Nicholson, P., D. Bertrand, and T.A. McAlary. *Soil Gas Sampling in Low- Permeability Soils,* Proceedings of Vapor Intrusion: Learning from the Challenges, Sponsored by the Air & Waste Management Association (AWMA) Providence, RI. September 26-28, 2007.

(**24**) Wilson, L.H., P.C. Johnson, and J.R. Rocco. *Collecting and Interpreting Soil Gas Samples from the Vadose Zone: A Practical Strategy for Assessing the Subsurface Vapor-to-Indoor Air Migration Pathway at Petroleum Hydrocarbon Sites,* American Petroleum Institute (API), Washington, DC. Publication Number 4741. November 2005.

(**25**) Woolfenden E. Sorbent-based Sampling Methods for Volatile and Semi-Volatile Organic Compounds in Air. Part 1: Sorbent Based Air Monitoring Options, *Journal of Chromatography*, Vol. 1217, pp 2674-2684. April 2010.

(**26**) Woolfenden E. Sorbent-based Sampling Methods for Volatile and Semi-Volatile Organic Compounds in Air. Part 2: Sorbent Selection and Other Aspects of Optimizing Air Monitoring Methods, *Journal of Chromatography*, Vol. 1217, pp 2685-2694. April 2010.

ASTM International takes no position respecting the validity of any patent rights asserted in connection with any item mentioned in this standard. Users of this standard are expressly advised that determination of the validity of any such patent rights, and the risk of infringement of such rights, are entirely their own responsibility.

This standard is subject to revision at any time by the responsible technical committee and must be reviewed every five years and if not revised, either reapproved or withdrawn. Your comments are invited either for revision of this standard or for additional standards and should be addressed to ASTM International Headquarters. Your comments will receive careful consideration at a meeting of the responsible technical committee, which you may attend. If you feel that your comments have not received a fair hearing you should make your views known to the ASTM Committee on Standards, at the address shown below.

This standard is copyrighted by ASTM International, 100 Barr Harbor Drive, PO Box C700, West Conshohocken, PA 19428-2959, United States. Individual reprints (single or multiple copies) of this standard may be obtained by contacting ASTM at the above address or at 610-832-9585 (phone), 610-832-9555 (fax), or service@astm.org (e-mail); or through the ASTM website (www.astm.org). Permission rights to photocopy the standard may also be secured from the ASTM website (www.astm.org/COPYRIGHT/).

Attachment Two

Evaluation of Soil-Gas Sampling Rate

Bart Eklund

URS Corporation, PO Box 201088, Austin, TX 78720-1088

Corresponding email: bart_eklund@urscorp.com

SUMMARY
Many indoor air studies are performed to address potential vapor intrusion (VI) of air toxics. As part of these studies, soil-gas samples are routinely collected from immediately beneath building slabs or at depth. Existing vapor intrusion guidance typically limits the rate of sampling to about 200 mL/min, though the technical basis for the limiting the sampling flow rate is not reported. Time-integrated and grab samples were collected at given locations at multiple sites to allow a direct comparison to determine whether any persistent bias was introduced by collecting grab samples. The results suggest that grab samples of soil-gas are equivalent to time-integrated samples.

IMPLICATIONS
The results indicate that grab samples of soil-gas are an acceptable option. The use of grab samples will simplify the equipment needed for field studies and should result in savings of both time and money at many sites.

KEYWORDS
soil gas, vapor intrusion, sampling, rate

INTRODUCTION
Vapor intrusion (VI) is an exposure pathway of interest for many indoor environments. During the last decade, concern over potential vapor intrusion has led to indoor air evaluations at thousands of buildings in the US and elsewhere to address air toxics such as petroleum hydrocarbons and chlorinated solvents. Indoor air testing for potential on-going exposure to carcinogens and other chemicals tends to be a very high-profile activity and vapor intrusion has become an important issue in the US for many building owners and occupants as well as potentially responsible parties.

The key issue in indoor air studies that address vapor intrusion is the incremental increase in indoor air concentrations due to subsurface sources of vapors. Therefore, vapor intrusion studies generally do not rely solely upon indoor air measurements. This is due, in large part, to the difficulty of interpreting indoor air data in light of potential confounding sources of indoor air pollutants such as chemical use and storage within buildings. To help determine the contribution of subsurface sources to indoor air quality, soil-gas samples are routinely collected from immediately beneath building slabs or at depth as part of vapor intrusion studies. The samples often are collected in evacuated, stainless-steel canisters of 6L or 1L volume and analyzed at an off-site analytical laboratory by US EPA Method TO-15.

Existing vapor intrusion guidance in the US typically limits the rate of sampling to 200 mL/min, so compliance with such guidance requires the use of flow controllers to collect a time-integrated sample. This flow rate limitation is believed to have originated with

California regulators (California DTSC/CRWQCB, 2003)(DTSC/CEPA, 2005) and has been retained in their most recent guidance, which states:.

> *"Purge/sample flow rates between 100 and 200 mL/min and vacuums less than 100 inches of water for standard small diameter (1/8 to ¼ inch) tubing should be maintained to minimize partitioning of vapors from pore water to soil gas (i.e., stripping), prevent ambient air from diluting the soil gas samples, and to reduce the variability of purging rates from contractor to contractor.* (CEPA, 2010)"

This upper flow rate of 200 mL/min also has been incorporated into other guidance documents (e.g., ITRC, 2007 and NJ DEP, 2005). One exception is the API guidance document on soil gas sampling (API, 2005), which states that "flow rates should not exceed about 1 L/min."

Discussions with state regulators in the US suggest that the upper limit on flow rate was set based on professional judgment. The above justification is based in part on leak rates, but the dilution of sample gas by any in-leakage to the sampling system is independent of the sampling rate unless there is a leak in the sampling system that only exists at higher vacuums. Such a leak could exist in theory, but is not believed to be the norm.

There is a need for empirical data to provide a valid technical basis and justification for any limits on sampling flow rate. Therefore, a field study was undertaken to test whether sampling flow rate had a significant effect on measured concentrations of volatile organic compounds (VOCs) in soil gas.

METHODS

Time-integrated and grab samples were collected at one to two locations at each of four sites to allow a direct comparison to determine whether any persistent bias was introduced by collecting grab samples. At each site, soil-gas samples were collected at a given location both as a time-integrated sample collected at a rate of about 45 mL/min (i.e., 6L samples collected over a two-hour period) and as a grab sample collected over approximately one minute. The grab samples generally were collected immediately after the time-integrated samples over a time period of one minute or less. For the grab samples, the estimated flow rate is in the range of 5,000 to 10,000 mL/min with the canister pressure dropping from about -29 "Hg at the start to about -5 "Hg at the end. All samples were analyzed at certified off-site analytical laboratories using USEPA Method TO-15.

RESULTS

The four field sites are listed in Table 1 along with key information about each site. A sampling depth of 0.2m denotes a sub-slab sample. The location IDs shown here and in the other tables are retained from the original studies for the sake of simplicity, but the specific designations are not intended to have meaning for the average reader.

The soil-gas measurement results are given in Table 2 for each compound detected in both samples above the reporting limit, except as follows. At site C, variable concentrations of BTEX also were detected in the samples but are not included in the table.

Table 1. Description of Sampling Locations

Site ID / General Location	Location ID	Soil-Gas Sampling Depth (m)	Approximate Depth to Groundwater (m)	Soil Type
A / North Carolina	81s	0.9 – 1.5	10	Saprolite (silt/clay, sand)
	85d	6.6 – 7.1	10	Silt & sand
B / Kansas	NW	0.2	5	Fill material
	04	1.5	5	Silty loam & clay
C / Michigan	06	0.2	1.5 – 3	Fill material
D / Illinois	12	3.5	11.6	Clayey sand to sand
	15	6.6	8.1	Clayey sand to sand

Table 2. Comparison of Time-Integrated and Grab Samples

Site / Location ID	Compound	Concentration (ppbv)		RPD (%)
		Time-Integrated	Grab	
A / 81s	PCE	15,000	16,000	6.5
	TCE	25	30	18.2
A / 85d	PCE	2,400	2,600	8.0
				Site A Pooled RPD = 11.7%
B / NW	Benzene	6,700	5,800	14.4
B / 04	Toluene	16	4.4	114
	m-/p-Xylene	8.0	5.7	33.6
				Site B Pooled RPD = 69.1%
C / 06	PCE	15	20	28.6
	TCE	2.1	2.5	17.4
	Chloroform	4.3	4.2	2.4
	Chloroethane	3.7	2.2	50.8
	Freon-12	2.8	3.4	19.4
				Site C Pooled RPD = 28.6%
D / 12	Hexane	3,200	2,800	13.3
	Cyclohexane	98,000	100,000	2.0
	2,2,4-TMP	190,000	170,000	11.1
	Benzene	620,000	690,000	10.7
D / 15	Cyclohexane	1,600	1,100	37.0
	2,2,4-TMP	93,000	84,000	10.2
				Site D Pooled RPD = 17.8%

DISCUSSION

The results show reasonable agreement between the time-integrated and grab samples. The agreement was best for VOCs detected at relatively high concentrations. For individual data pairs with concentrations ≥1,000 ppbv, the relative percent difference (RPD) is <15% for eight of nine data pairs. For the compounds detected at relatively low concentrations (i.e., <20 ppbv), greater variability is observed. This variability generally is not significant, however, as the absolute differences in concentration are small and would not influence decisions about the need for any site mitigation. The typical (pooled) RPD varies from site to site, but is <30% for three of the four sites in the study.

The variability of the time-integrated versus grab duplicate samples is a function of both sampling and analytical variability. The key question is whether the variability for time-integrated versus grab duplicates differs from the variability for conventional time-integrated duplicate samples collected simultaneously using a "T" fitting. A representative data set derived from duplicate samples collected at Site A is given in Table 3. For these data, the sampling rate was 45 mL/min per canister, with the regular sample and duplicate sample collected simultaneously using "T" fitting. The pooled RPD for this data set is 15.3% with the RPD for individual data pairs as high as 31.6% for one sample pair with concentrations >1,000 ppbv.

Table 3. Example of Precision for Pairs of Time-Integrated Samples

Site / Location ID	Date	Compound	Concentration (ppbv)		RPD (%)
			Regular Sample	Duplicate	
A / 01s	June 2009	PCE	2,300	2,100	9.1
		TCE	3.7	4.3	15.0
A / 100s	June 2009	PCE	17	17	0.0
		TCE	0.25	0.26	3.9
A / 01s	Dec 2009	PCE	2,000	2,000	0.0
		TCE	3.2	4.6	35.9
A / 100s	Dec 2009	PCE	16	16	0.0
		TCE	0.26	0.27	3.8
A / 01s	June 2010	PCE	1,600	2,200	31.6
		TCE	2.2	2.8	24.0
A / 99s	June 2010	PCE	31	31	0.0
		TCE	0.25	0.27	7.7
A / 01s	Dec 2010	PCE	2,100	2,000	4.9
		TCE	<7.0	<6.0	--
A / 100s	Dec 2010	PCE	17	17	0.0
		TCE	<0.88	<0.88	--
					Pooled RPD = 15.3%

The available data set is limited in size but suggests that results for grab versus time-integrated samples are comparable to results for duplicate time-integrated samples. In other words, sampling flow rate does not appear to increase the variability above typical measurement (i.e., sampling + analytical) variability.

The results from this study are consistent with the results reported by McAlary and Creamer (2006), who found stable PID and USEPA TO-3 values for soil gas at sampling rates of <150 mL/min, 1,000 mL/min, and 10,000 mL/min.

Another point of comparison is the expected temporal variability. One recent study involved 24 sub-slab soil-gas measurements over an eight-day period and reported total VOC concentrations to vary by about a factor of 2X (Patterson and Davis, 2009). Reported temporal variability over longer periods of a year or two is not substantially greater. For example, a recent USEPA-funded study reported that soil gas concentrations "vary by less than 3X over 12 months" (Swanson, et al., 2010). This finding is consistent with other recently reported data collected over a two to three year period (Eklund, 2010).

The observed variability between duplicate samples shown in Tables 2 and 3 is far less than the temporal variability reported above. This suggests that it is more important when the sample is collected than how (grab vs. time-integrated) the sample is collected.

CONCLUSIONS

The results indicate that grab samples of soil-gas are equivalent to time-integrated samples and are an acceptable option. The use of grab samples will eliminate the need for flow control devices for soil-gas samples and avoid problems sometimes associated with orifice-type flow controllers (e.g., zero flow due to plugging). The use of grab samples also should result in savings of both time and labor.

REFERENCES

American Petroleum Institute (API). Collecting and Interpreting Soil Gas Samples from the Vadose Zone. Publication Number 4741. November 2005.

California DTSC/CRWQCB. Advisory – Active Soil Gas Investigations. Memo from E.F. Lowry and D.A. Dickerson. January 28, 2003.

California Environmental Protection Agency. Advisory – Active Soil Gas Investigation (Review Draft). March 2010.

DTSC/CEPA. Department of Toxic Substances Control / California Environmental Protection Agency. Guidance for the Evaluation and Mitigation of Subsurface Vapor Intrusion to Indoor Air – Interim Final. December 15, 2004 (Revised January 7, 2005).

Eklund, B. Typical Spatial and Temporal Variability in VI Data Sets and Implications for Regulatory Policy. In: Proceedings of the Seventh International Conference on Remediation of Chlorinated and Recalcitrant Compounds, Sponsored by Battelle. Monterey, CA. May 24-27, 2010.

ITRC. Vapor Intrusion Pathway: A Practical Guideline. Interstate Technology & Regulatory Council, Document VI-1. January 2007.

McAlary, T. and T. Creamter. The Effects of Purge Rate and Volume on Sub-slab Soil Gas Samples. In: Proceedings of the Fifth International Conference on Remediation of Chlorinated and Recalcitrant Compounds, Sponsored by Battelle. Monterey, CA. May 22-25, 2006.

New Jersey Department of Environmental Protection (NJDEP). Vapor Intrusion Guidance. October 2005.

Patterson, , B.M. and G.B. Davis. Quantification of Vapor Intrusion Pathways into a Slab-on-Ground Building under Varying Environmental Conditions. Environ. Sci. Technol., Vol. 43, No. 3, pp650-656. 2009.

Swanson, G., B. Schumacher, J. Zimmerman, B. Hartman, and J. Elliot. Seasonal Variation of Soil-Gas Concentrations Near and Under a Salb Over a Year. In: Proceedings of the Seventh International Conference on Remediation of Chlorinated and Recalcitrant Compounds, Sponsored by Battelle. Monterey, CA. May 24-27, 2010.